標 準 螺 絲 供 應 有 限 公 司 (513831-P)
STANDARD BOLTS & NUTS SDN. BHD.
No. 47 & 49, Jalan TPP 1/1, Taman Industri Puchong, 12th Miles,
47100 Puchong, Selangor Darul Ehsan, Malaysia.
Tel: 03-8062 3811 (Hunting Line) Fax: 03-8062 2230, 8068 2811
Website: http://www.standardbolts.net E-mail: sale@standardbolts.net

THUMB SCREW KNOB FOR SOCKET HEAD CAP SCREW

Material
High-quality plastic

Diameter Size
M3, M4, M5, M6, M8 and M10

Thumb Knob Size	Head Diameter	Head Height	For Screw Size (d)
M3	9.5MM	4.5MM	M3
M4	13.0MM	5.5MM	M4
M5	16.0MM	6.6MM	M5
M6	19.0MM	8.0MM	M6
M8	25.5MM	10.0MM	M8
M10	36.0MM	12.0MM	M10

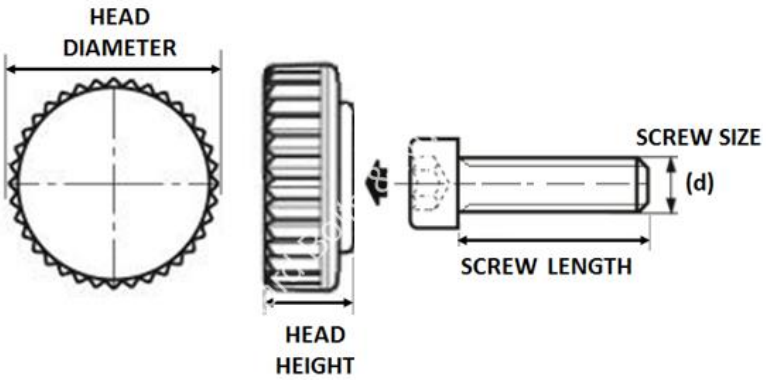

BRANCH :

SBN (KLANG)
135 & 137, Jalan Batu Tiga Lama,
Berkeley Town Centre,
41300 Klang, Selangor Darul Ehsan.
Tel : 03-3344 1198 (Hunting Line)
Fax : 03-3344 2811
E-mail: sbnk@standardbolts.net

SBN (SG. BULOH)
No. 5 & 7, Block D, Jalan Gelen J, U19/J,
Megamas Business Centre, Kampung Baru Sg. Buloh,
47000 Sg. Buloh, Selangor Darul Ehsan, Malaysia.
Tel : 03-6148 1198 (Hunting Line)
Fax : 03-6148 2811
E-mail: sbnsb@standardbolts.net